IR Edixeon® RC Series

IR Edixeon® emitters are one of the highest power LEDs in the world by Edison Opto. IR Edixeon® emitters are designed to satisfy more and more Solid-State lighting High Power LED applications for brilliant world such as CCTV.

Features

- Low voltage operation
- Instant light
- Long operating life
- Reflow process compatible.

Copyright©2008 Edison Opto. All rights reserved.

Table of Contents

Product Nomenclature 2
Environmental Compliance 3
LED Package Dimensions and Polarity 4
LED Package with Star Dimensions and Polarity 5
Absolute Maximum Ratings 6
Luminous Flux Characteristics 7
Forward Voltage Characteristics 8
JEDEC Information 9
Reliability Items and Failure Measures 10
Color Spectrum and Radiation Pattern 14
Optical & Electrical Characteristics 16
Product Soldering Instructions 20
Product Thermal Application Information 24
Product Electrical Application Information 29
Product Packaging Information 30
Star Product Packaging Information 32

Product Nomenclature

The following table describes the available color, power, and lens type. For more flux and forward voltage information, please consult the Bin Group document.

< Table 1 Edixeon® RC series nomenclature >

E	D	E	I	-	1	L	C	3	-	0	3	-	A	B	16
X1		X2	X3		X4	X5	X6	X7		X8	X9		X10	X11	X12

X1 LED Item		X2 Module		X3 Emitting Color		X4 Power		X5 Lens Item		X6 Housing Item	
Code	Type	Code	Type	Code	Type	Code	Type	Code	Type	Code	Type
ED	Edixeon®	E	Emitter	E	660nm	1	1 W	L	Lambertian	C	Black-2
		S	Star	F	740nm	3	3 W				
				I	IR 850nm	5	5W				
				N	IR 940nm						

X7 Material	X8 Phosphor Item	X9 Testing Current		X10 Shape Item		X11 Al PCB Color		X12 Thickness	
		Code	Type	Code	Type	Code	Type	Code	Type
		1	350mA	A	Star	W	White	10	1.0mm
		3	700mA	B	Square(25*25mm)	G	Green	16	1.6mm
				C	Square(30*30mm)	B	Black	20	2.0mm

Environmental Compliance

IR Edixeon® RC series are compliant to the Restriction of Hazardous Substances Directive or RoHS. The restricted materials including lead, mercury cadmium hexavalent chromium, polybrominated biphenyls (PBB) and polybrominated diphenyl ether (PBDE) are not used in IR Edixeon® RC series to provide an environmentally friendly product to the customers.

LED Package Dimensions and Polarity

Lambertian Emitter Type

EDEE-1LCx & EDEF-1LCx

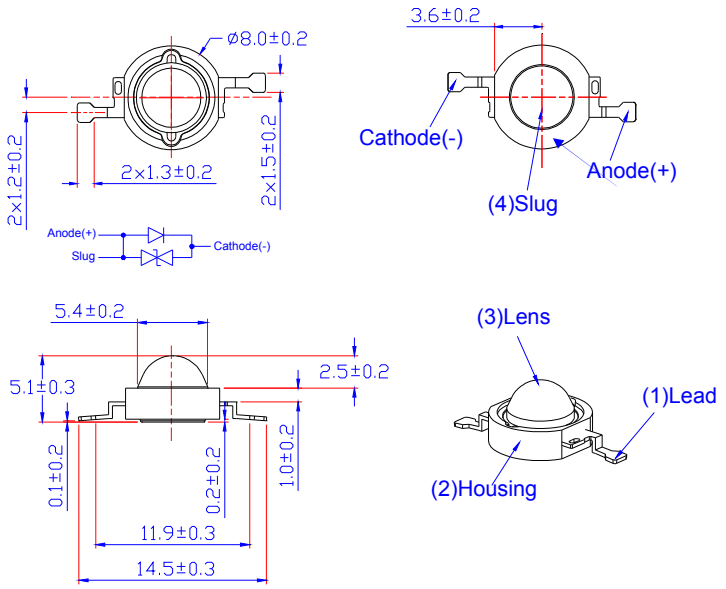

EDEI-1LCx & EDEN-1LCx

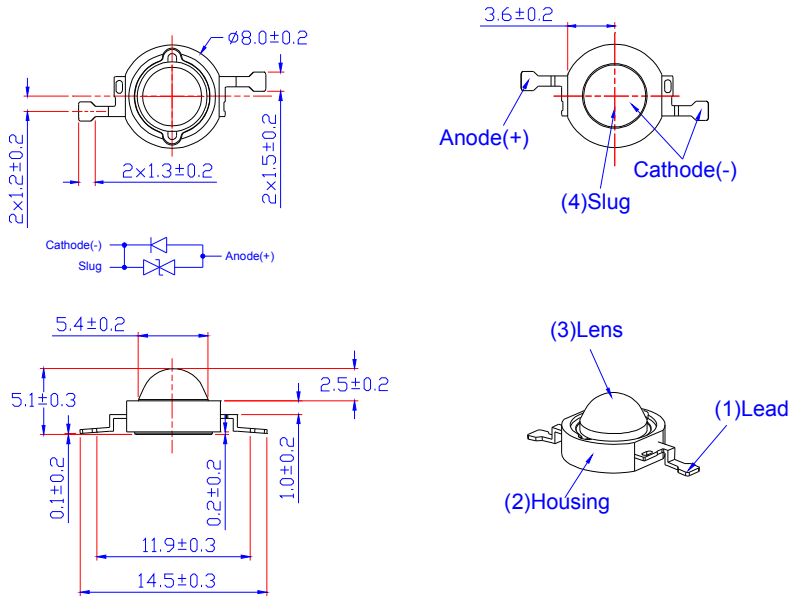

< Figure 1 IR Edixeon® RC series dimensions >

Notes:

1. All dimensions are measured in mm.
2. Drawings are not to scale.
3. It is strongly recommended that the temperature of lead dose not exceed 55℃.
4. The slug has polarity as anode.
5. It is strongly recommended to apply on electrically isolated heat conducting film between the slug and contact surfaces.

LED Package with Star Dimensions and Polarity

EDSx-xLCx-xx-AB16

Top View Side View

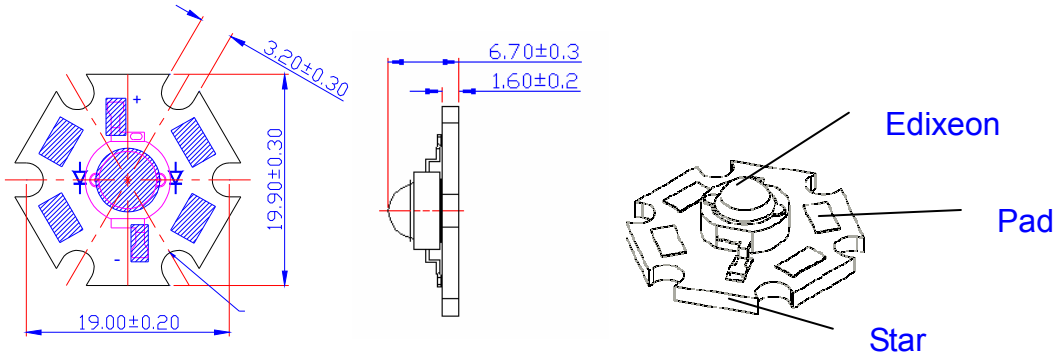

EDSx-xLCx-xx-BB16

Top View Side View

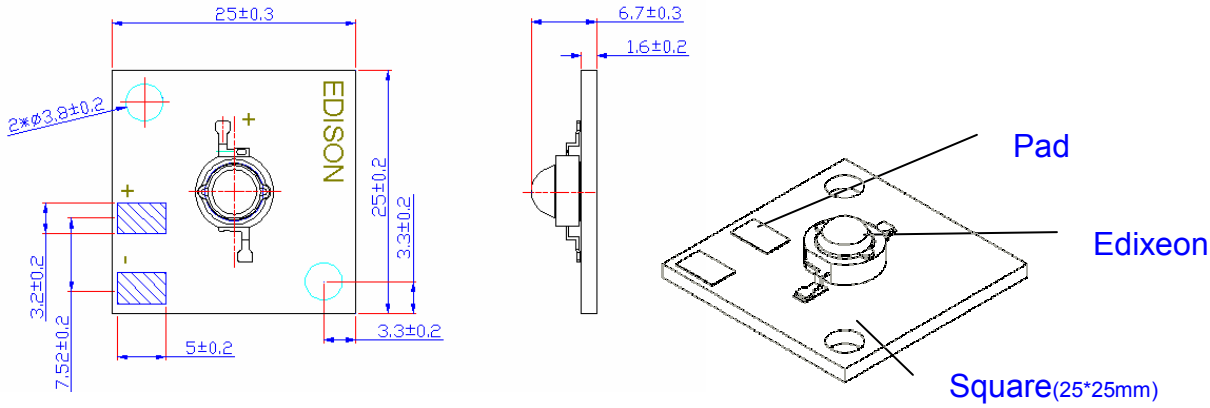

EDSx-xLCx-xx-CB16

Top View Side View

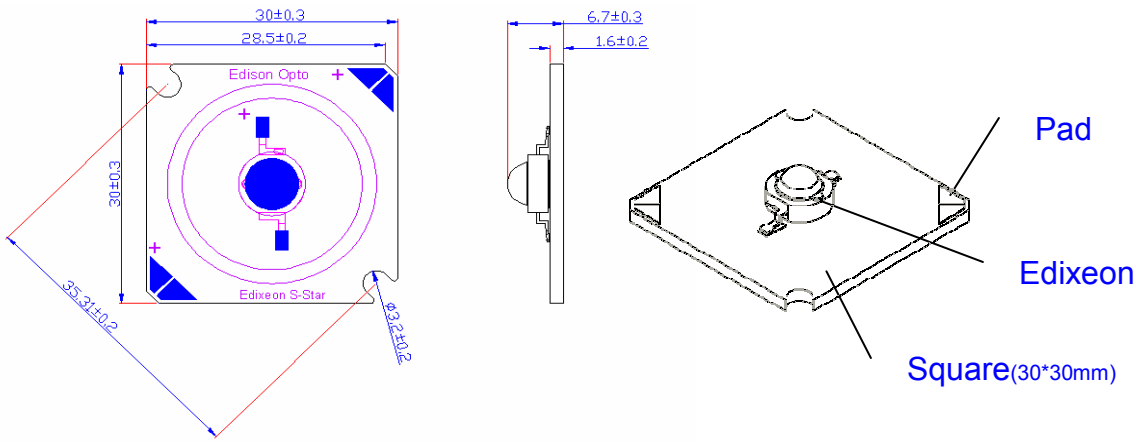

<Figure 2 IR Edixeon® star dimensions>

Notes:

1. All dimensions are in mm.
2. It is strongly recommended that the temperature of lead does not exceed 55℃.

Absolute Maximum Ratings

The following tables describe flux of IR Edixeon® RC series under various current and different colors.

< Table 2 Absolute maximum ratings for IR Edixeon® RC series >

Parameter	EDEE & EDEF	EDEI & EDEN	Unit	Symbol
DC Forward Current(1W)	350	700	mA	I_F
Peak pulse current;(tp≦100μs, Duty cycle=0.25)	500	1,000	mA	
Reverse Voltage	5	5	V	V_R
Forward Voltage	5	5	V	V_F
LED junction Temperature	125	125	℃	T_j
Operating Temperature	-30 ~ +110	-30 ~ +110	℃	
Storage Temperature	-40 ~ +120	-40 ~ +120	℃	
Soldering Temperature	260	260	℃	
ESD Sensitivity	4,000	4,000	V	V_B
Manual Soldering Time at 260℃(Max.)	5	5	Sec.	

Notes:

1. Proper current derating must be observed to maintain junction temperature below the maximum at all time.
2. LEDs are not designed to be driven in reverse bias.
3. Allowable reflow cycles are 3 times for each LED.
4. tp: Pulse width time

The following tables describe thermal resistance of IR Edixeon® RC series under various current and different color.

< Table 3 Temperature Coefficient of Forward Voltage & Thermal Resistance Junction to Case Characteristics at Tj=25℃ for IR Edixeon® RC series >

Lens Item	Part Name	Color	$\triangle V_F/\triangle T$		$R\theta_{J-B}$	
			Typ.	Units	Typ.	Unit
Lambertian	EDEx-1LCx	--	-2	mV/℃	15	℃/W

Luminous Flux Characteristics

The following tables describe flux of Edixeon® RC series under various current and different color.

< Table 4 Radiometric power characteristics at IF=350mA and TJ=25℃: for EDEE-1LCx & EDEF-1LCx >

Lens Item	Part Name	Color	Radiometric power			Unit
			Min.	Typ.	Max.	
Lambertian	EDEE-1LC3	Deep Red	22.5	50.0	--	mW
	EDEE-1LC4	Deep Red	75.9	150.0	--	mW
	EDEF-1LC3	Cherry Red	50.6	130.0	--	mW

< Table 5 Radiometric power characteristics at I_F=700mA and T_J=25℃: for EDEI-1LC3 & EDEN-1LC3 >

Lens Item	Part Name	Color	Radiometric power			Unit
			Min.	Typ.	Max.	
Lambertian	EDEI-1LC3	IR 850	113.9	300.0	--	mW
	EDEN-1LC3	IR 940	75.9	140.0	--	mW

Notes:

1. Flux is measured with an accuracy of ± 10%.
2. Red and true green light source represented here are IEC60825 class 1 for eye safety.

Forward Voltage Characteristics

The following tables describe forward voltage of Edixeon® RC series emitter under various current.

< Table 6 Forward voltage characteristics at I_F=350mA and T_J=25℃ for EDEE-1LCx & EDEF-1LCx >

Lens Item	Part Name	Color	V_F		Unit
			Min.	Max.	
Lambertian	EDEE-1LC3	Deep Red	1.5	2.5	V
	EDEE-1LC4	Deep Red	2.0	3.0	V
	EDEF-1LC3	Cherry Red	2.0	3.0	V

< Table 7 Forward voltage characteristics at IF=700mA and TJ=25℃ for EDEI-1LCx & EDEN-1LCx >

Lens Item	Part Name	Color	V_F		Unit
			Min.	Max.	
Lambertian	EDEI-1LC3	IR 850	1.5	2.5	V
	EDEN-1LC3	IR 940	1.5	2.5	V

Note:

1. Forward Voltage is measured with an accuracy of ± 0.1V

JEDEC Information

JEDEC moisture sensitivity classification is used to determine what classification level should be used for initial reliability qualification. Once identified, the LEDs can be properly packaged, stored and handled to avoid subsequent thermal and mechanical damage during the assembly solder reflow attachment and/or repair operation. The present moisture sensitivity standard contains six levels, the lower the level ,the longer the devices floor life. IR Edixeon® RC series are certified at level 2a. This means IR Edixeon® RC series have a floor life of 4 weeks before IR Edixeon® RC series need to re-baked.

< Table 8 JEDEC characteristics at T_J=25℃ for IR Edixeon® RC series>

Level	Floor Life		Soak Requirements				
			Standard		Accelerated Equivalent		
					eV 0.40~0.48	eV 0.30~0.39	Condition
	Time	Condition	Time(hours)	Condition	Time(hours)	Time(hours)	
2a	4 weeks	≦30℃/60% RH	696[1] +5/-0	30℃/60% RH	120 +1/-0	168 +1/-0	60℃/60% RH

Level	Floor Life		Soak Requirements				
			Standard		Accelerated Equivalent		
					eV 0.40~0.48	eV 0.30~0.39	Condition
	Time	Condition	Time(hours)	Condition	Time(hours)	Time(hours)	
1	Unlimited	≦30℃/85% RH	168 +5/-0	85℃/85% RH	NA	NA	NA
2	1 year	≦30℃/60% RH	168 +5/-0	85℃/60% RH	NA	NA	NA
2a	4 weeks	≦30℃/60% RH	696[1] +5/-0	30℃/60% RH	120 +1/-0	168 +1/-0	60℃/60% RH
3	168 hours	≦30℃/60% RH	192[1] +5/-0	30℃/60% RH	40 +5/-0	52 +5/-0	60℃/60% RH
4	72 hours	≦30℃/60% RH	96[1] +5/-0	30℃/60% RH	20 +5/-0	24 +5/-0	60℃/60% RH
5	48 hours	≦30℃/60% RH	72[1] +5/-0	30℃/60% RH	15 +5/-0	20 +5/-0	60℃/60% RH
5a	24 hours	≦30℃/60% RH	48[1] +5/-0	30℃/60% RH	10 +5/-0	13 +5/-0	60℃/60% RH
6	Time on tabel (TOL)	≦30℃/60% RH	TOL	30℃/60% RH	NA	NA	NA

Notes:

1. The standard soak time includes a default value of 24 hours for semiconductor manufacturer's exposure time (MET) between bake and bag , and includes the maximum time allowed out of the bag at the distributor's facility.
2. Joint Electron Devices Engineering Councils (JEDEC) is the leading developer of standards for the solid-state industry. Almost 3100 participants, appointed by some 290 companies work together in 50 JEDEC committees to meet the needs of every segment of the industry, manufacturers and consumers alike. The publications and standards that they generate are accepted throughout the world. (http://www.jedec.org)

Reliability Items and Failure Measures

Reliability test

The following table describes operating life, mechanical, and environmental tests performed on IR Edixeon® RC series package.

< Table 9 Operating life, mechanical, and environmental characteristics and T_J=25℃ for IR Edixeon® RC series>

Stress Test	Stress Conditions	Stress Duration	Failure Criteria
Room Temperature Operating Life	25℃, I_F = I_F Max DC (Note 1)	1,000 hours	Note 2
High Temperature High Humidity	85℃ / 85%RH	1,000 hours	Note 2
Temperature Cycle	-40℃/100℃ ,30 min dwell /＜5min transfer	500 cycles	Note 2
High Temperature Storage Life	110℃	1,000 hours	Note 2
Low Temperature Storage Life	-40℃	1,000 hours	Note 2
Thermal Shock	-40 / 125℃, 15 min dwell /＜10 sec transfer	1,000 cycles	No catastrophics
Mechanical Shock	1500 G, 0.5 msec pulse, 5 shocks each of 6 axis		No catastrophics
Natural Drop	On concrete from 1.2 m, 3X		No catastrophics
Variable Vibration Frequency	10-2000-10 Hz, log or linear sweep rate, 20 G about 1 min, 1.5 mm, 3X/axis		No catastrophics
Solder Heat Resistance (SHR)	260℃ ± 5℃, 10 sec		No catastrophics

Notes:

1. Depending on the maximum derating curve.
2. Failure Criteria:

Electrical failures

V_F shift >=10%

Light Output Degradation

% Iv shift >= 30% @1,000hrs or 200cycle

Visual failures

Broken or damaged package or lead

Solderability < 95% wetting

Dimensions out of tolerance

Failure Types

Catastrophic failures are failures that result in the LED emitting no light or very little light at normal current levels (e.g. 350 mA). Catastrophic failures are not expected for Edixeon® emitter that are handled and operated within the limits specified in Edixeon® documentation. Please refer to Absolute Maximum Ratings for more information on design limits.

Parametric failures are failures that cause key characteristics to shift outside of acceptable bounds. The most common parametric failure, for a high-power LED, is permanent light output degradation over operating life. Most other light sources experience catastrophic failure at the end of their useful life, providing a clear indication that the light source must be replaced. For instance, the filament of an incandescent light bulb breaks and the bulb ceases to create light. In contrast, high-power LEDs generally do not experience catastrophic failure but simply become too dim to be useful in the intended application. Further discussion of this matter can be found in the Long-Term Lumen Maintenance Testing section of this document.

Another parametric failure common to white LEDs is a large and permanent shift in the exact color of white light output, called the white point or color point. A shift in white point may not be detectable in one LED by itself, but would be obvious in a side-by-side comparison of multiple LEDs. Since each lighting installation commonly uses many high-power LEDs, white point stability is a point of concern for lighting designers. Typically, white high-power LEDs, created by combining blue LEDs with yellow (and sometimes red) phosphor, will shift towards blue over operational life. This shift can be accelerated by high temperatures and high drive currents. For example, a cool white (e.g., 6500K CCT) LED with a white point failure will typically appear light blue instead of white. In some high-power LEDs, this failure mode can occur after just 1,000 hours of operational life.

Just as with fluorescent light sources, all white high-power LEDs will experience shifts in white point over their operating lives. It is possible for the design of the phosphor and packaging systems to minimize these shifts and contain the shifts to be less than what is detectable by the human eye. As with catastrophic failures, parametric failures can be minimized by adhering to limits specified in Edixeon® documentation.

The MTBF of IR Edixeon® RC series

Mean time between failures (MTBF) is the mean (average) time between failures of a system, the reciprocal of the failure rate in the special case when the failure rate is constant. Calculations of MTBF assume that a system is "renewed", i.e. fixed, after each failure, and then returned to service immediately after failure. A related term, mean distance between failures, with a similar and more intuitive sense, is widely used in transport industries such as railways and trucking. The average time between failing and being returned to service is termed mean down time (MDT).

The formula of MTBF for IR Edixeon® RC series can be

$$\log(\text{Life}) = \frac{1{,}600}{T_J(^{o}C)+273}$$

< Table 10 Relation between Junction Temperature and Life time >

T_J (^{o}C)	Life (hours)	T_J (^{o}C)	Life (hours)
25	234,000	85	29,500
30	191,000	90	25,700
35	157,000	95	22,300
40	129,000	100	19,500
45	107,000	105	17,100
50	90,000	110	15,100
55	75,000	115	13,300
60	64,000	120	11,700
65	54,000	125	10,500
70	46,000	130	9,300
75	39,600	140	7,500
80	34,000	150	6,000

Note:

1. Life means the time when light output decay to 70%

The MTTF of IR Edixeon® RC series

An estimate of the average, or mean time until a design's or component's first failure, or disruption in the operation of the product, process, procedure, or design occurs. Mean time until a failure assumes that the product CAN NOT be repaired and the product CAN NOT resume any of it's normal operations.

Mean time to failure (MTTF) is related to items such as expected and/or operating life or other items that in general are not fixed or replacement even though it sometimes may be.

MTTF is assumed to be 100,000,000

The failure rates at different hours and different systems (LED quantity) are as below:

if there is 1 failure of 1 emitter in a system

Tj=75℃ is giving 0.01%(100ppm) at 10,000hrs

if there is 1 failure of 10 emitters in a system

Tj=75℃ is giving 0.1%(1,000ppm) at 10,000hrs

if there is 1 failure of 1 emitter in a system

Tj=75℃ is giving 0.05%(500ppm) at 50,000hrs

if there is 1 failure of 10 emitters in a system

Tj=75℃ is giving 0.5%(5,000ppm) at 50,000hrs if there are 10 emitters

ASSIST FORM For High Power LED Reliability(Ex: IR Edixeon RC series @350mA)

< Table 11 Different Junction Temperature Characteristics >

	Ts=45°C	Ts=65°C	Ts=85°C
Voltage	2.5V	2.5V	2.5V
Current	350mA	350mA	350mA
Wattage	0.9W	0.9W	0.9W
Heat	0.8W	0.8W	0.8W
Rth	15 °C/W	15 °C/W	15 °C/W
T_J	60 °C	80 °C	100 °C
$L_{70\%}$	64,000hrs	34,000hrs	19,500hrs

Notes:

1. Ts: slug temperature
2. ASSIST. Alliance for Solid-State Illumonation Systems and Technonlgies

Color Spectrum and Radiation Pattern

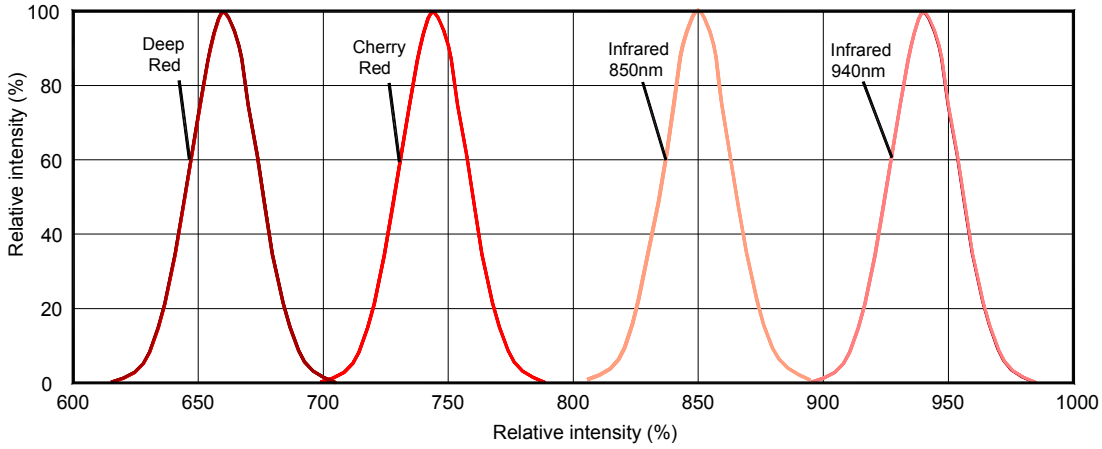

< Figure 3. Color spectrum at T_J =25℃.for IR Edixeon® RC series for all color>

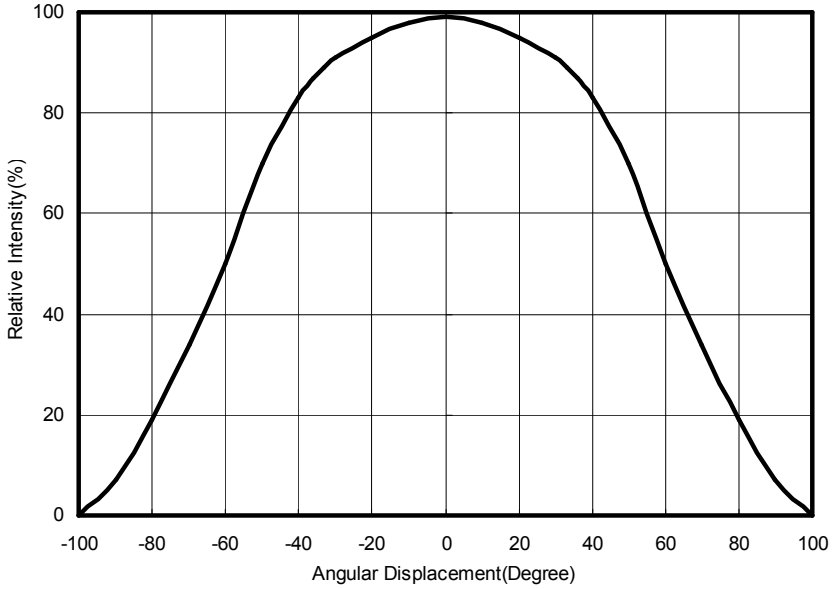

<Figure 4.Lambertain at T_J=25℃ for all Colors>

Emission Angle Characteristics

< Table 12 Emission angle Characteristics at Tj=25℃ for IR Edixeon® RC series >

Part Name	Color	2Θ½(Typ.) Lambertian	Unit
EDEE-1LC3	Deep Red	120	Deg.
EDEE-1LC4	Deep Red	120	Deg.
EDEF-1LC3	Cherry Red	120	Deg.
EDEI-1LC3	IR 850	120	Deg.
EDEN-1LC3	IR 940	120	Deg.

< Table 13 Peak wavelength Characteristics at Tj=25℃ for IR Edixeon® RC series >

Lens Item	Part Name	Color	λp		Unit
			Min.	Max.	
Lambertian	EDEE-1LC3	Deep Red	650.	670	nm
	EDEE-1LC4	Deep Red	650	670	nm
	EDEF-1LC3	Cherry Red	730	750	nm
	EDEI-1LC3	IR 850	840	860	nm
	EDEN-1LC3	IR 940	930	950	nm

Notes:

1. Wavelength is measured with an accuracy of ± 0.5nm

Optical & Electrical Characteristics

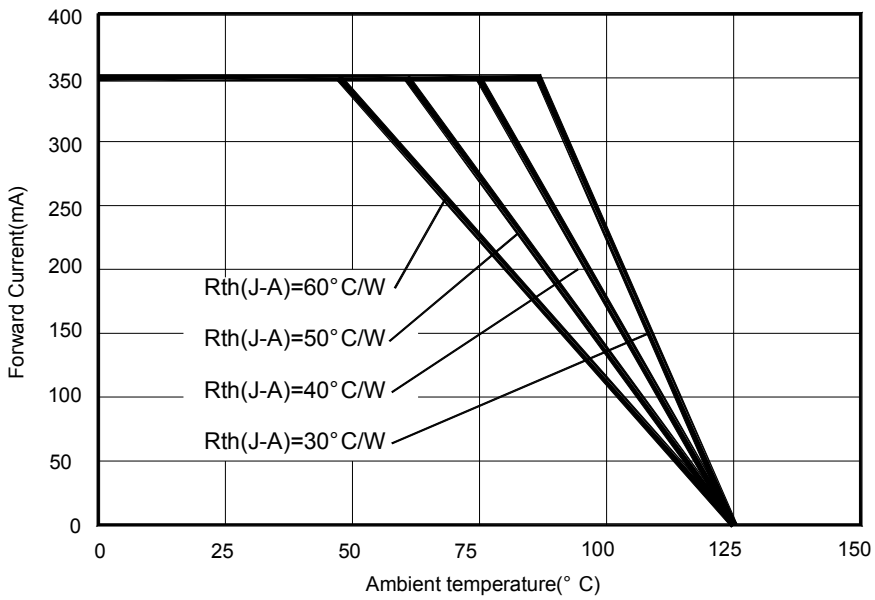

< Figure 5 Operating Current & Ambient Temperature for EDEE-1LCx、EDEF-1LCx >

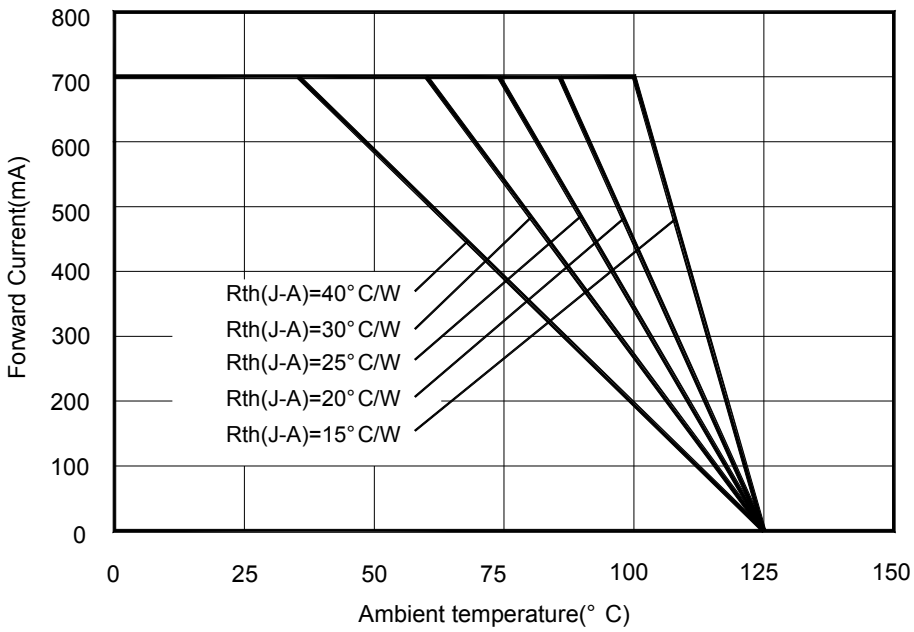

< Figure 6 Operating Current & Ambient Temperature for EDEI-1LCx、EDEN-1LCx >

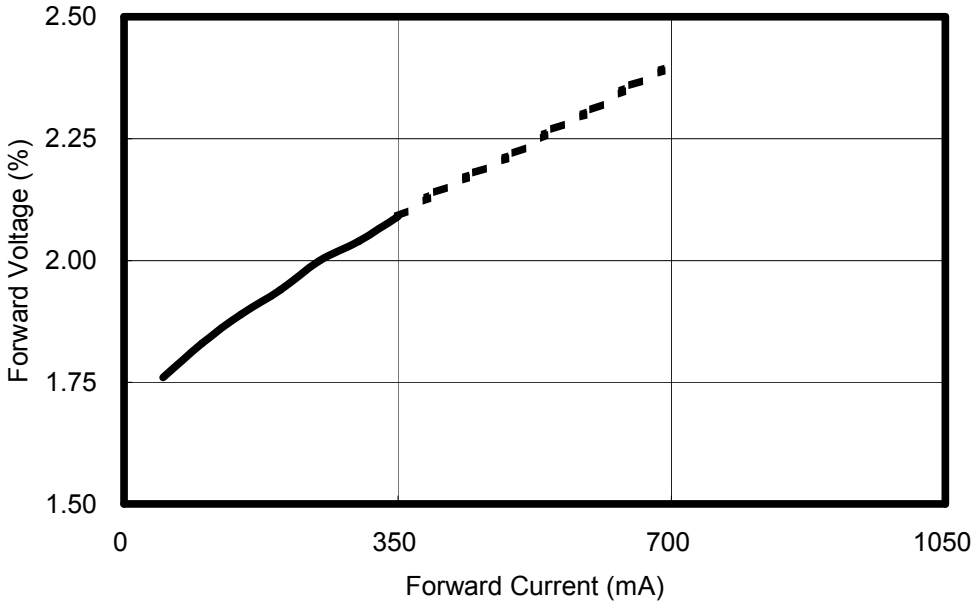

< Figure 7 Forward Current & Forward Voltage for EDE-1LCx、EDEF-1LCx >

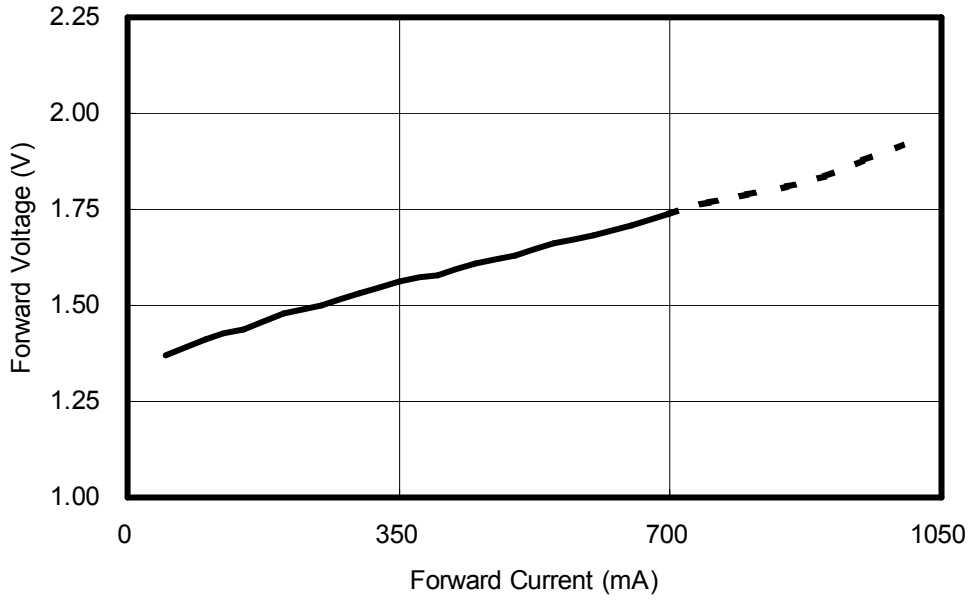

< Figure 8 Forward Current & Forward Voltage for EDEI-1LCx、EDEN-1LCx >

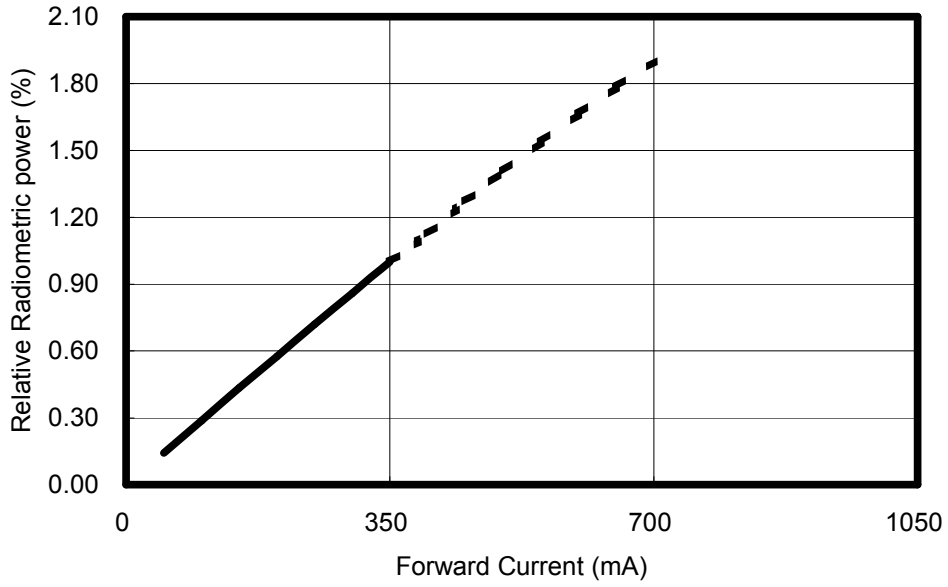

< Figure 9 Forward Current & Relative Radiometric Power for at T_J=25℃ for EDEE-1LCx、EDEF-1LCx >

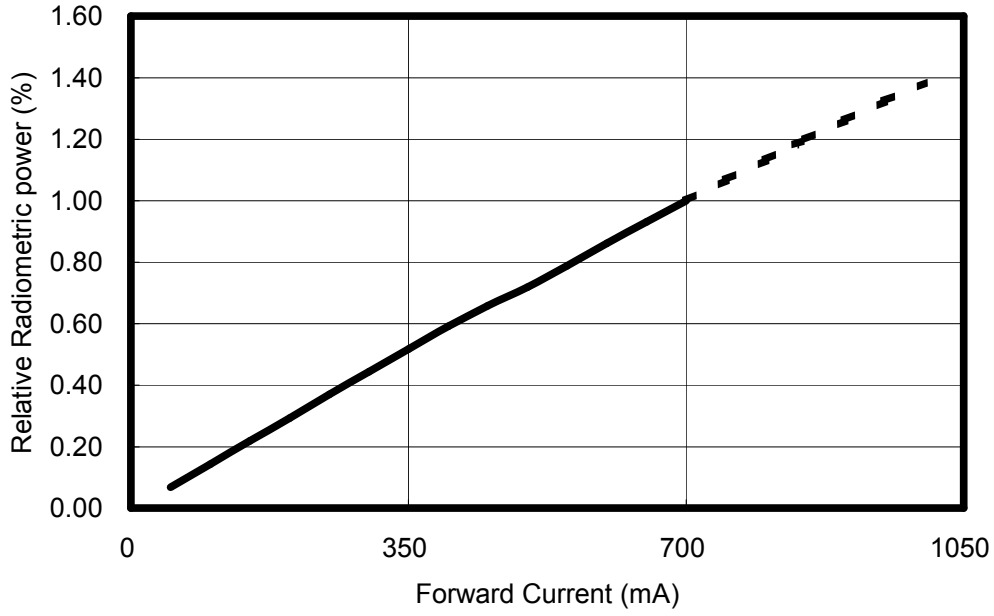

< Figure 10 Forward Current & Relative Radiometric Power for at T_J=25℃ for EDEI-1LCx、EDEN-1LCx >

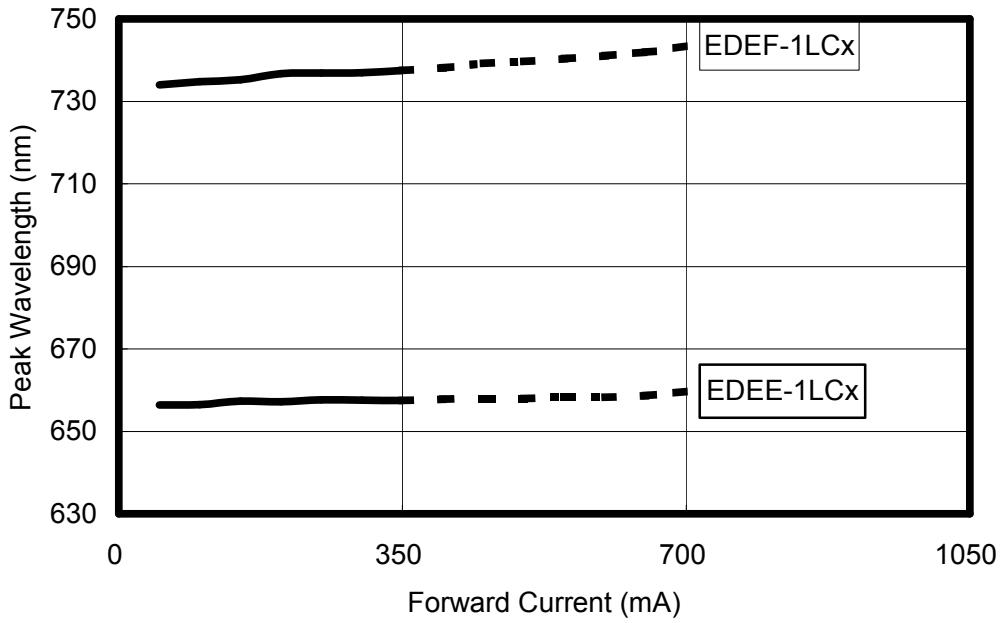

< Figure 11.Forward Current & Wavelength at TJ=25℃ for EDEE-1LCx、EDEF-1LCx >

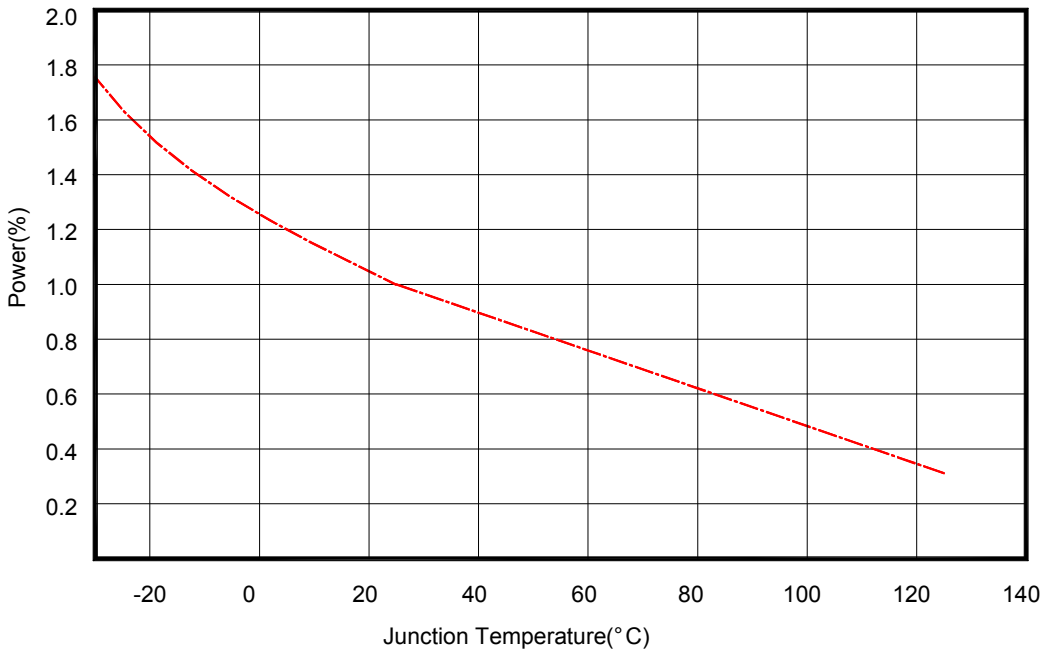

< Figure 12. Junction temperature & power rate for all IR Edixeon® RC series >

Product Soldering Instructions

The central circle pad at the bottom face of the package provides the main path for heat dissipation from the LED to the heat sink (heat sink contact).

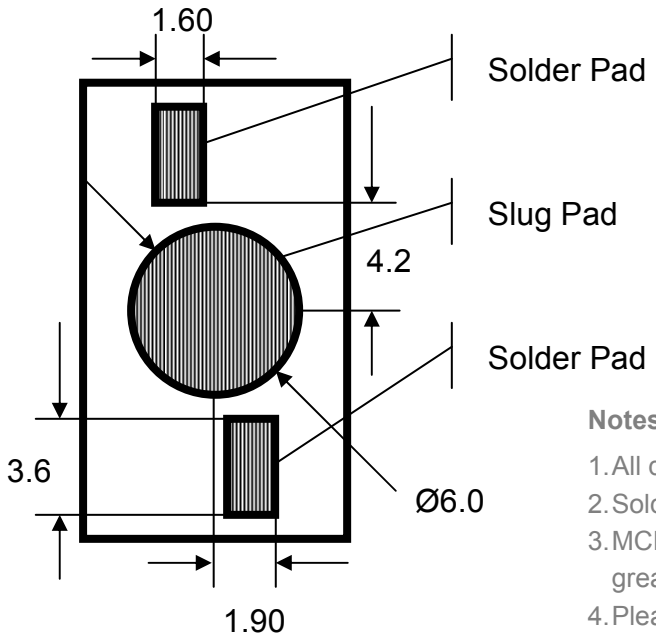

< Figure 13.Pad dimensions >

Notes:

1. All dimensions are measured in mm.
2. Solder pad cannot be connected to slug pad.
3. MCPCB material with a thermal conductivity greater than 3.0 W/mK.
4. Please avoid touching the Edixeon® lens during assembly processes .This may cause pollution or scratch on the surface of lens.

The choice of solder and the application method will dictate the specific amount of solder. For most consistent results, an automated dispensing system or a solder stencil printer is recommended.
Positive results will be used solder thickness that results in 50μm. The lamp can be placed on the PCB simultaneously with any other required SMD devices and reflow completed in a single step. Automated pick-and-place tools are recommended.

The central slug at the bottom face of the package provides the main path for heat dissipation from the LED to the heat sink (heat sink contact). A key feature of Edixeon® RC series is an electrically neutral heat path that is separate from the LED's electrical contacts. This electrically isolated thermal pad makes Edixeon® RC series perfect for use with either FR4 circuit boards with thermal via or with metal-core printed circuit boards (MCPCB).

Recommend Solder Steps

To prevent mechanical failure of LEDs in the soldering process, a carefully controlled pre-heat and post-cooling sequence is necessary. The heating rate in an IR furnace depends on the absorption coefficients of the material surfaces and on the ratio of the

component's mass to its irradiated surface. The temperature of parts in an IR furnace, with a mixture of radiation and convection, cannot be determined in advance. Temperature measurement may be performed by measuring the temperature of a specific component while it is being transported through the furnace. Influencing parameters on the internal temperature of the component are as follows:

• Time and power
• Mass of the component (for IR Edixeon® RC series on MCPCB)
• Size of the component
• Size of the printed circuit board
• Absorption coefficient of the surfaces and MCPCB
• Packing density

Peak temperatures can vary greatly across the PC board during IR processes. The variables that contribute to this wide temperature range include the furnace type and the size, mass and relative location of the components on the board. Profiles must be carefully tested to determine the hottest and coolest points on the board. The hottest and coolest points should fall within the recommended temperatures. The profile of the reflow system should be based on design needs, the selected solder system and the solder-paste manufacturer's recommended reflow profile.

Recommended Profile for Reflow Soldering

The following reflow soldering profiles are provided for reference. Edison recommends that users follow the recommended soldering profile provided by the manufacturer of the solder paste used.

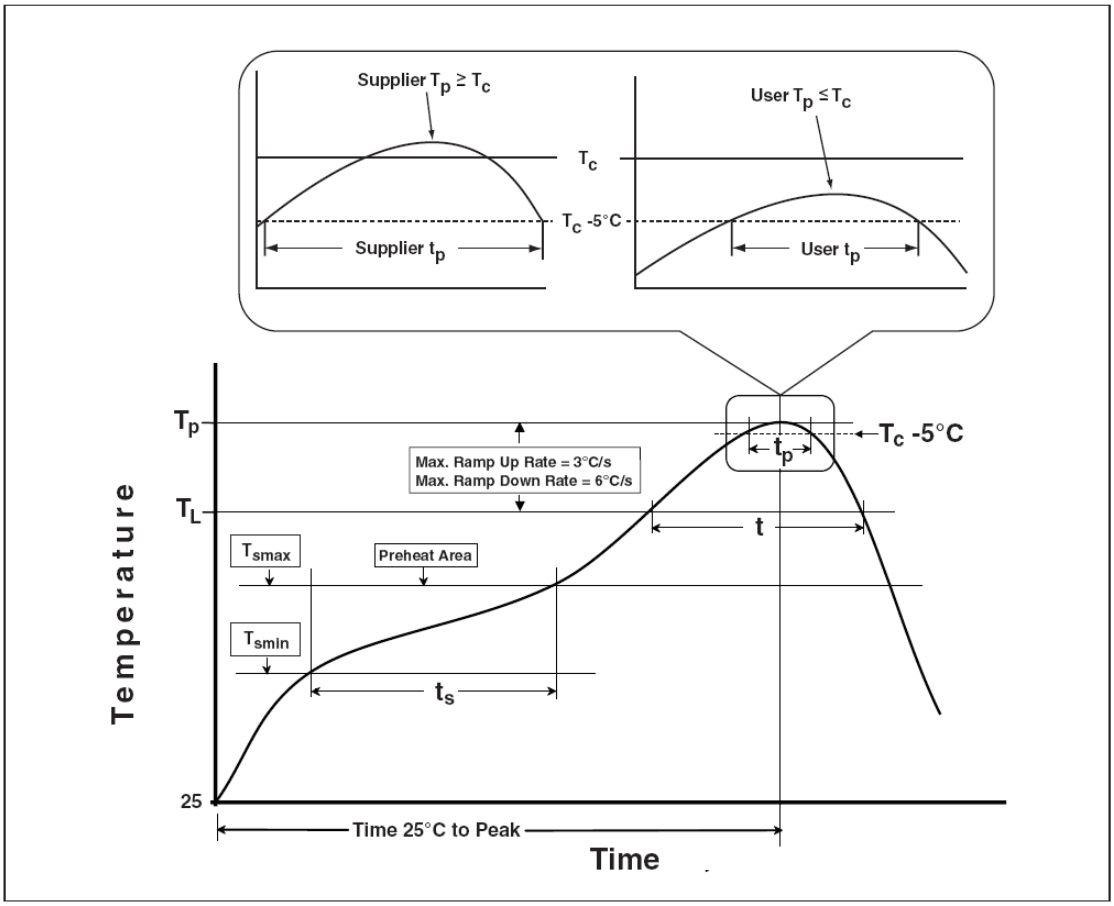

< Figure 14 Reflow profiles >

Table of Classification Reflow Profiles

< Table 14 Reflow profiles >

Profile Feature	Sn-Pb Eutectic Assembly	Pb-Free Assembly
Preheat & Soak Temperature min (Tsmin) Temperature max (Tsmax) Time (Tsmin to Tsmax) (ts)	100 °C 150 °C 60-120 seconds	150 °C 200 °C 60-120 seconds
Average ramp-up rate (Tsmax to Tp)	3 °C/second max.	3 °C/second max.
Liquidous temperature (TL) Time at liquidous (tL)	183 °C 60-150 seconds	217 °C 60-150 seconds
Peak package body temperature (Tp)*	230 °C ~235 °C *	255 °C ~260 °C *
Classification temperature (Tc)	235 °C	260 °C
Time (tp)** within 5 °C of the specified classification temperature (Tc)	20** seconds	30** seconds
Average ramp-down rate (Tp to Tsmax)	6 °C/second max.	6 °C/second max.
Time 25 °C to peak temperature	6 minutes max.	8 minutes max.

* Tolerance for peak profile temperature (Tp) is defined as a supplier minimum and a user maximum.
** Tolerance for time at peak profile temperature (tp) is defined as a supplier minimum and a user maximum.

Product Thermal Application Information

Thermal grease should be evenly speeded with a thickness <100um.

When assembling on MCPCB or heat sink carrier.

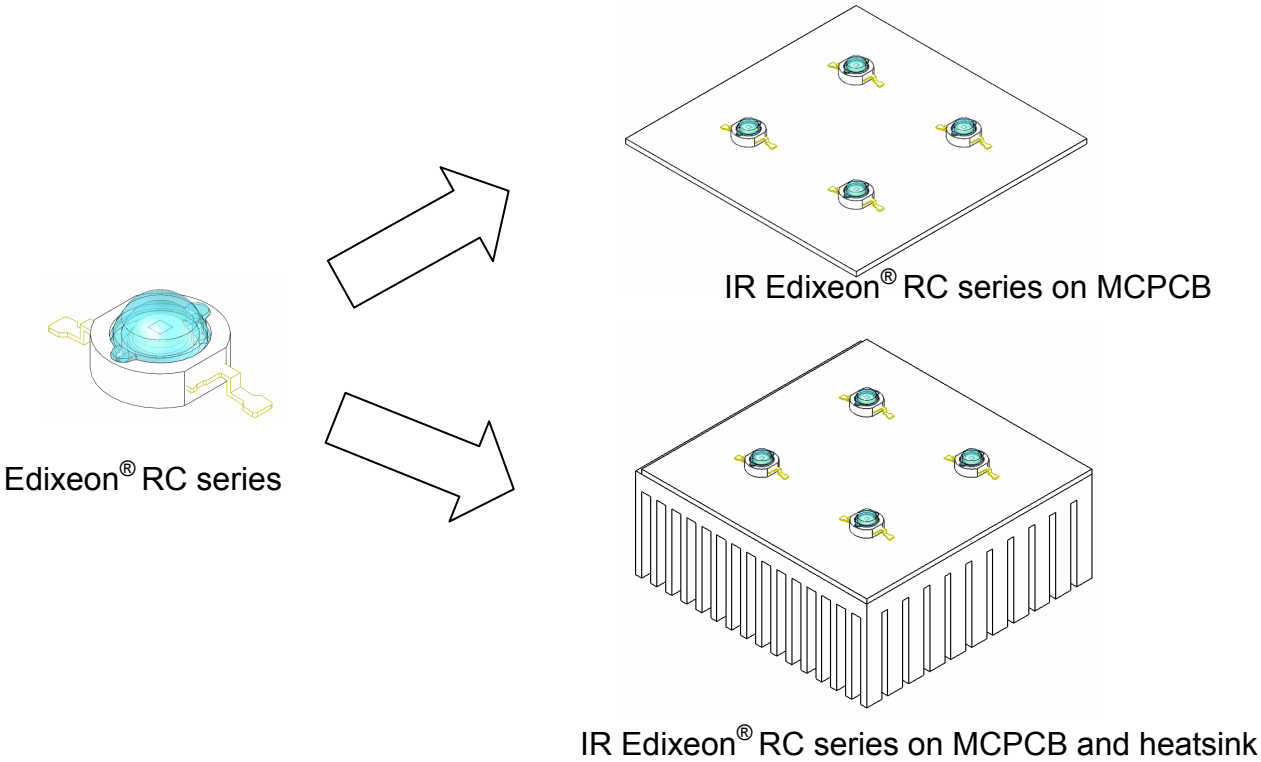

< Figure 15 IR Edixeon® RC series heatsink application >

—It is strongly recommanded the heat sink should be anodized.

—Please ensure the heat sink is flat enough to prevent the bad heat conductivity.

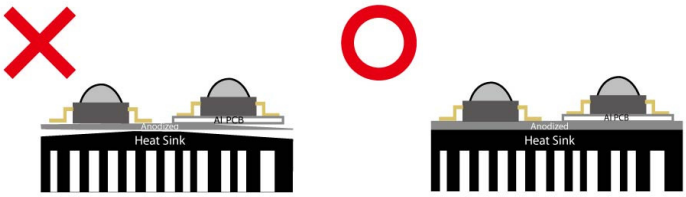

<Figure 16 IR Edixeon® RC series assemble with heatsink>

Thermal Resistance Application

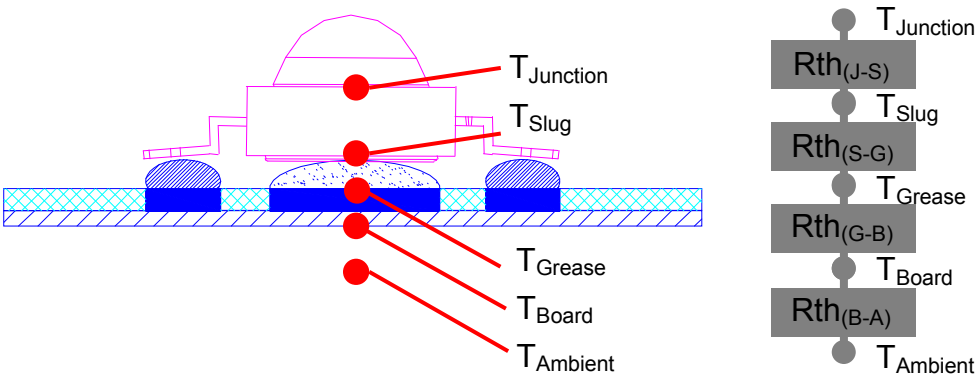

$Rth_{(J-A)} = Rth_{(J-S)} + Rth_{(S-G)} + Rth_{(G-B)} + Rth_{(B-A)}$

$T_{Junction} = T_{Ambient} + Rth_{(J-A)} \times P_{Dissipation}$

$(T_J = T_A + Rth_{(J-A)} \times P_{Dissipation})$

<Figure 17 Rth and T_J for IR Edixeon® series >

Suggested Adhesive for Selection(such as thermal grease)

- Ease of use

Non-solvent, One-part

- Fast tack free

  3 minutes at 25°C

- No corrosion

  Alcohol type of room temperature vulcanization (RTV)

- Low volatility

  Low weight loss of silicone volatiles

- Adhesion

  Excellent adhesion to most materials without use of a primer

- Dielectric properties

  Cured rubber exhibits good dielectric properties

- Excellent thermal stability and cold resistance

  Cured rubber provides wide service temperature range

< Table 15 Specification for adhesive properties >

Specification	Suggested Properties
Take-free time	3~10 minutes
Specific gravity	< 3 g/cm^2
Thermal conductivity	> 2.5 W/mK
Rth in using	< 1.8 ^{o}C/W
Volume resistance	> 1x10^{14}
Lap shear adhesion strength	> 200 N/ cm^2
Tensile strength	> 4 Mpa

Thermal Resistance Calculation

The thermal resistance between two points is defined as the ratio of the difference in temperature to the power dissipated. For calculations in the following units used are °C/W. In the case of LEDs, the resistance of two important thermal paths affects the junction temperature:

From the LED junction to the thermal contact at the bottom of the package, this thermal resistance is governed by the package design. It is referred to as the thermal resistance between junction and slug (Rth $_{(J-S)}$)

From the thermal contact to ambient conditions, this thermal resistance is defined by the path between the slug ,board ,and ambient. It is referred to as the thermal resistance between slug and board (Rth $_{(S-B)}$) and between board and ambient (Rth $_{(B-A)}$).

The overall thermal resistance between the LED junction and ambient (Rth $_{(J-A)}$) can be modeled as the sum of the series resistances Rth $_{(J-S)}$, Rth $_{(S-B)}$.,and Rth $_{(B-A)}$.

The following will show how to calculate Rth for each part of LED module.

1. Rth$_{(J-S)}$

Assume Edixeon® Rth$_{(J-S)}$=10 ^{o}C/W

2. Rth$_{(S-G)}$

If the thickness of thermal grease is 100um and area is $(6.4/2)^2\pi$ mm^2.

Thermal conductivity of thermal grease is 2.6 W/mK.

The Formula of Rth is $\dfrac{\text{Thickness(um)}}{\text{Thermal Conductivity (W/mK) x Area(mm}^2\text{)}}$

Therefore $Rth_{(S-G)} = \frac{100}{2.6 \times (6.4/2)^2 \pi} = 1.2\,^{o}C/W$

3. $Rth_{(G-B)}$

The Rth of standard MCPCB is 1.5 ^{o}C/W

4. $Rth_{(B-A)}$

The Rth between board and air is mainly dependent on the total surface area.

Therefore $Rth_{(B-A)} \fallingdotseq \frac{500}{Area(cm)^2}$

If Area is 30cm^2	Rth=16.7	$Rth_{(J-A)}$ =10+1.2+1.5+16.7 =29.4 ^{o}C/W
If Area is 60cm^2	Rth=8.3	$Rth_{(J-A)}$ =10+1.2+1.5+8.3 =21°C/W
If Area is 90cm^2	Rth=5.5	$Rth_{(J-A)}$ =10+1.2+1.5+5.5 =18.2^{o}C/W

Junction Temperature Calculation

The total power dissipated by the LED is the product of the forward voltage (V_F) and the forward current (I_F) of the LED.

The temperature of the LED junction is the sum of the ambient temperature and the product of the thermal resistance from junction to ambient and the power dissipated.

$T_{Junction} = T_{Air} + Rth_{(J-A)} \times P_{Dissipation}$

If one white Edixeon® in room temperature (25ºC) operated 350mA and V_F=3.3V, the $P_{Dissipation}$=0.35 x 3.3=1.155W

And junction temperature is

$T_{Junction}$ = 25ºC+ 18.2 x 1.155 = 46.021ºC (total surface area =90cm^2)

$T_{Junction}$ = 25ºC+ 21 x 1.155 = 49.255 ºC (total surface area =60cm^2)

$T_{Junction}$ = 25ºC+ 29.4 x 1.155 = 58.957 ºC (total surface area =30cm^2)

Example : Junction Temperature Calculation

One white LED is used under ambient temperature ($T_{Ambient}$) of 30°C. This LED is soldered on MCPCB (Area=10cm^2). Calculate junction temperature.

Assuming a forward voltage of V_F=3.3V at 350mA and total power dissipated is $P_{Dissipation}$=1x 0.35 x 3.3= 1.155 W.

LED $Rth_{(J-S)}$=10 °C /W.

With good design, $Rth_{(S-G)}$ can be minimized to 1 °C /W.

$Rth_{(G-B)}$ of a standard MCPCB can be 1.5 °C /W.

The Rth between board and air is mainly dependent on the total surface area.

Therefore it can be calculated in formula $\frac{500}{Area(cm)^2}$

$Rth_{(B-A)} = \frac{500}{10} = 50\,°C\,/W.$

Following the formula $T_{Junction} = T_{Ambient} + Rth_{(J-A)} \times P_{Dissipation}$

$T_{Junction} = 30\,°C + (10\,°C\,/W + 1\,°C\,/W + 1.5\,°C\,/W + 50\,°C\,/W) \times 1.155W$

$= 102.1875\,°C$

That means this LED emitter is operated under good condition ($T_{Junction} < 125\,°C$).

It's strongly recommended to keep the junction temperature under 125 ºC

Or keep the temperature of emitter lead not exceed 55 ºC

Product Electrical Application Information

Following graphs and descriptions show how to connect LED or LED module and plug to AC outlet.

Step1: Connect the wires of LED Module to the DC output of the driver.

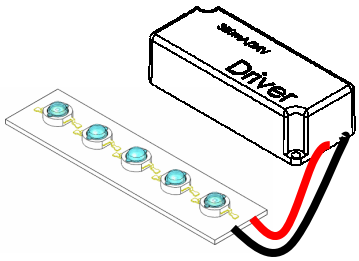

<Figure 18 LED Module connect to the DC output of the driver>

Step2 : Plug the driver to AC outlet.

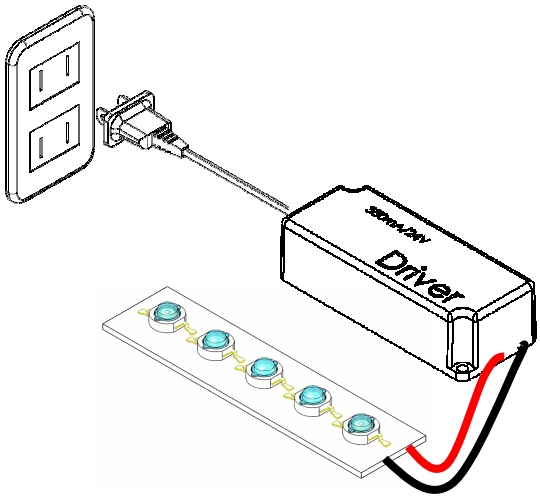

<Figure 19 Plug the AC output of the driver to AC outlet>

Caution: Never plug the driver to AC outlet before the LED Module is properly connected as this may generate transient voltage damage the LEDs permanently with a short or open circuit.

Product Packaging Information

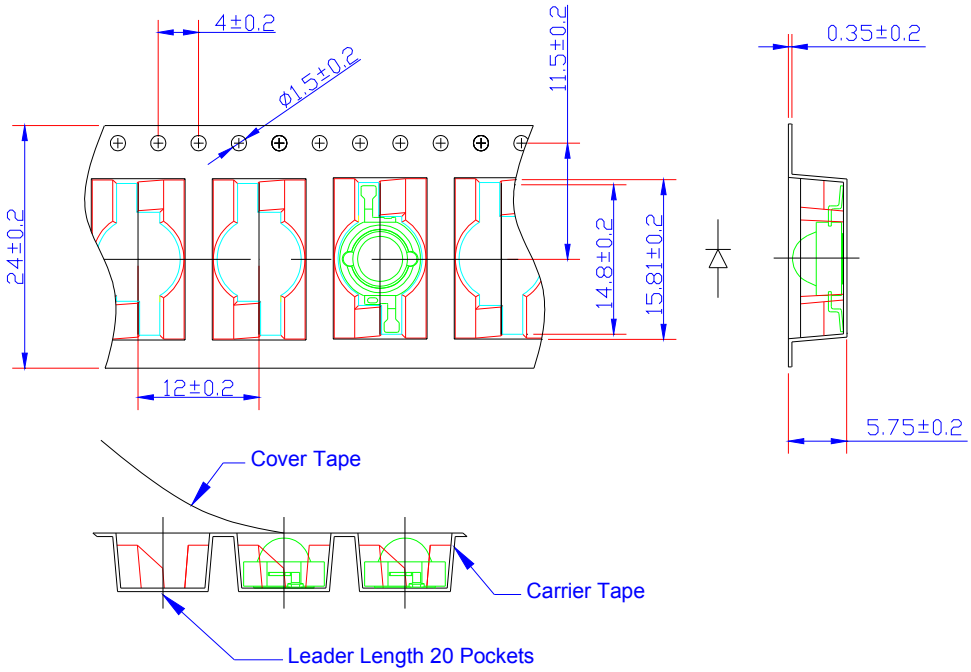

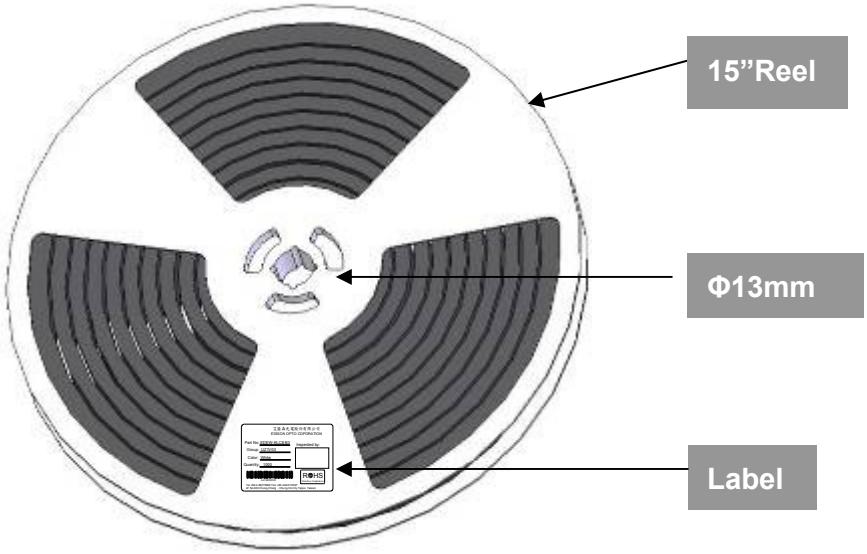

<Figure 20 Taping reel dimensions>

The Label

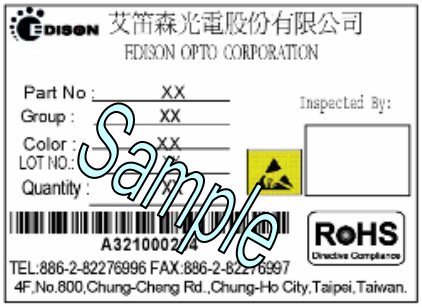

< Figure 21 Label on taping reel >

Packaging Steps

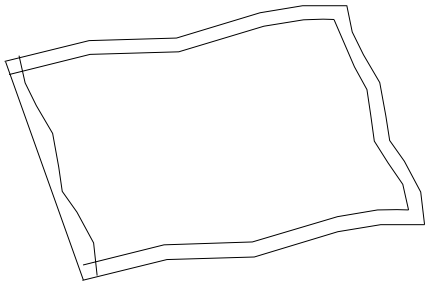

1 reel in a bag.

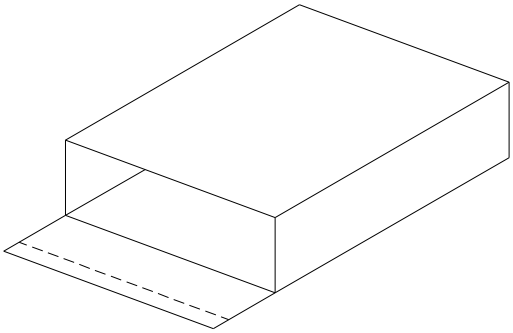

2 bags in an inner box.

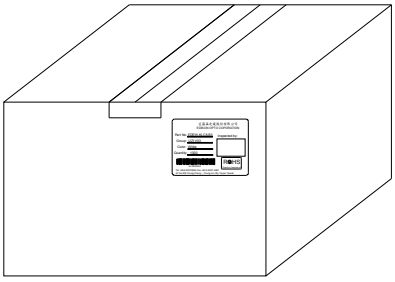

2 inner boxes in an outer box.

<Figure 22 Packaging steps>

Notes:

1. All dimensions are in mm.
2. There are 1000pcs emitters in a full reel.
3. There is one reel in a bag.
4. There are 2 bags in an inner box.
5. There are 2 inner boxes in an outer box.
6. A bag contains one humidity indicator card and drying agent.

Star Product Packaging Information

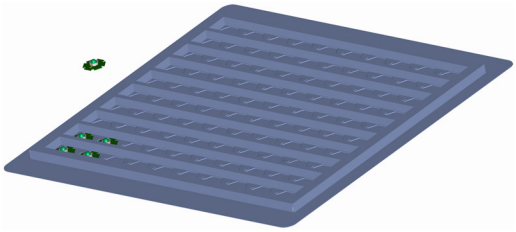

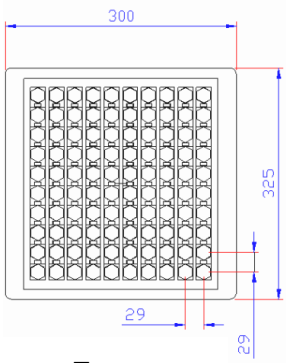

Tray

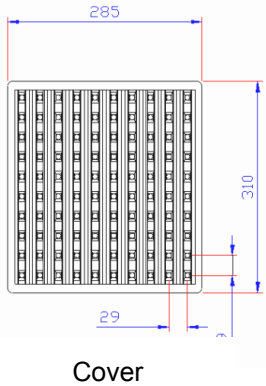

Cover

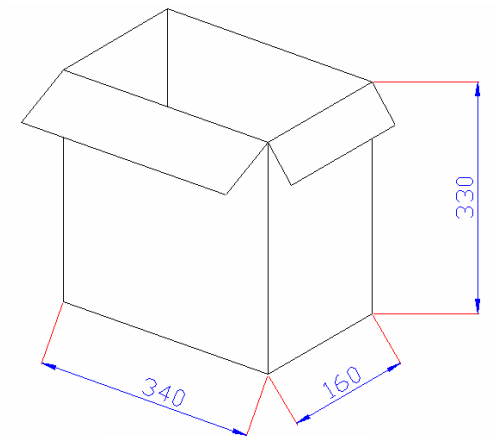

Inner box

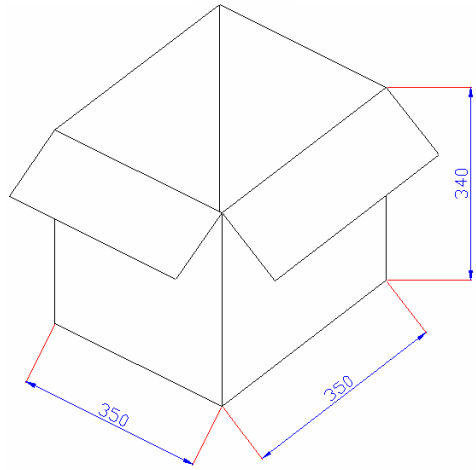

Outer box

<Figure 23 IR Edixeon® Star Package>

Notes:

1. All dimensions are in mm.
2. There are 100pcs stars in a tray.(Tray+Cover)
3. There are 10 trays in an inner box.
4. There are 2 inner boxes in an outer box.

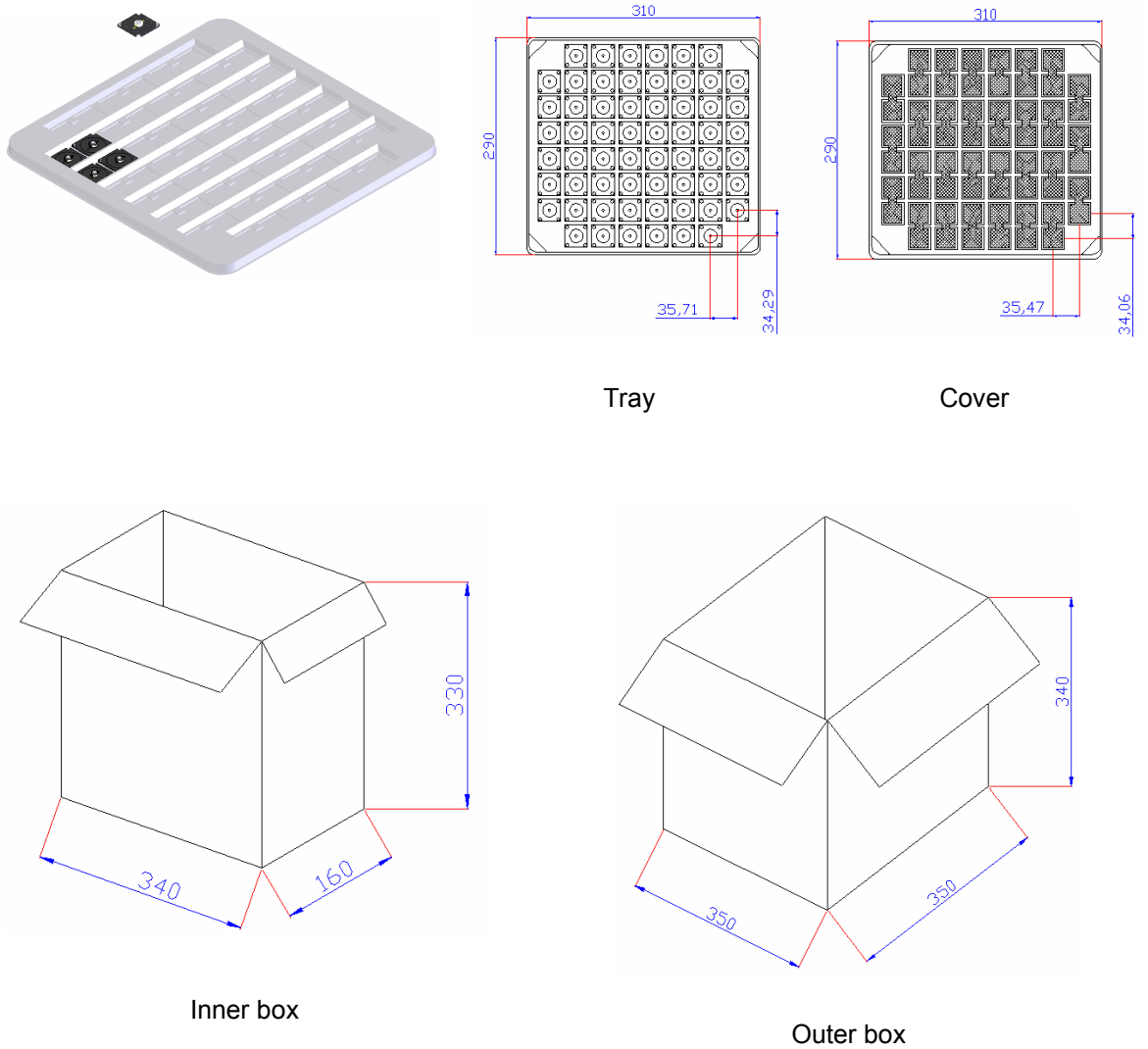

<Figure 24 IR Edixeon® Star Package>

Notes

1. All dimensions are in mm.
2. There are 60 pcs stars in a tray.(Tray+Cover)
3. There are 10 trays in an inner box.
4. There are 2 inner boxes in an outer box.